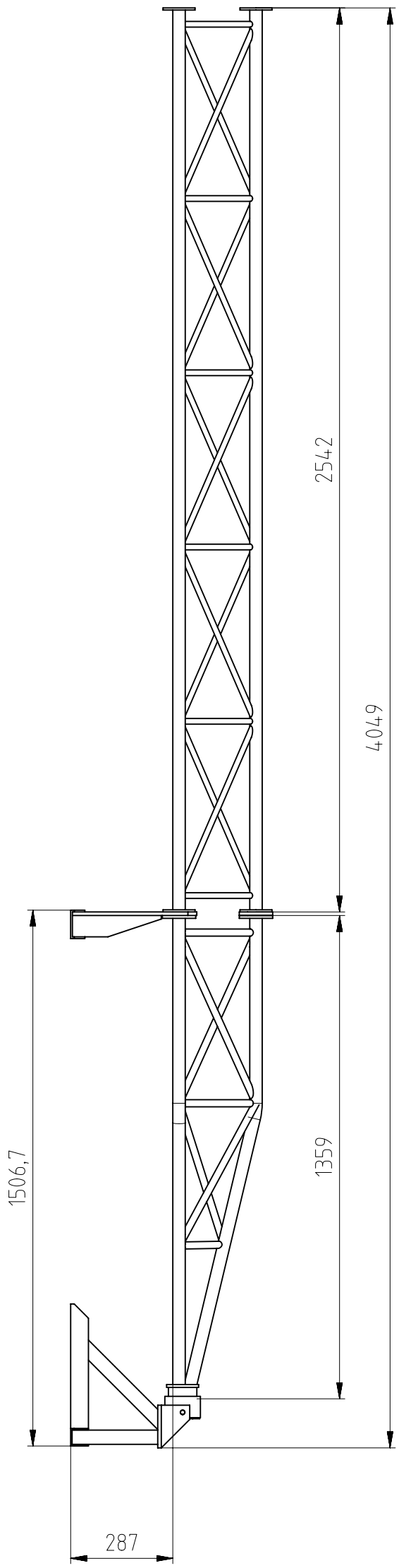

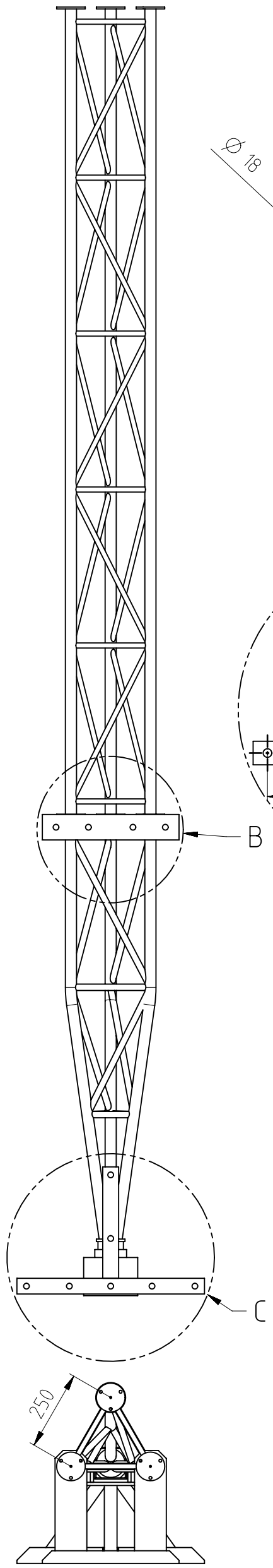

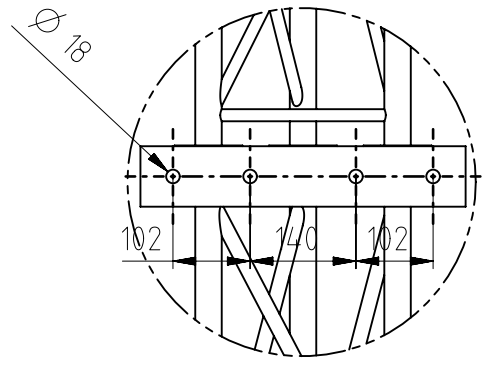

DETAIL B
SCALE 1:10

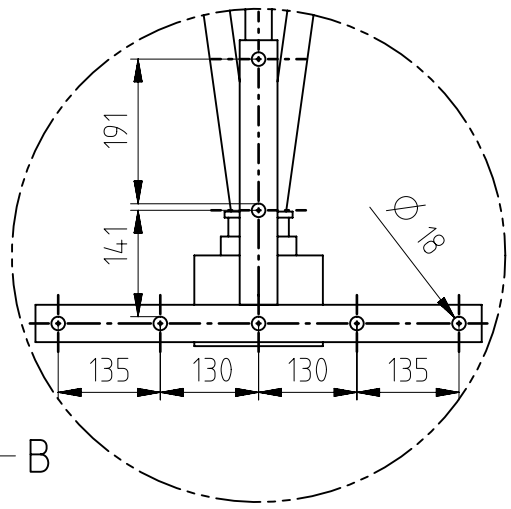

DETAIL C
SCALE 1:10

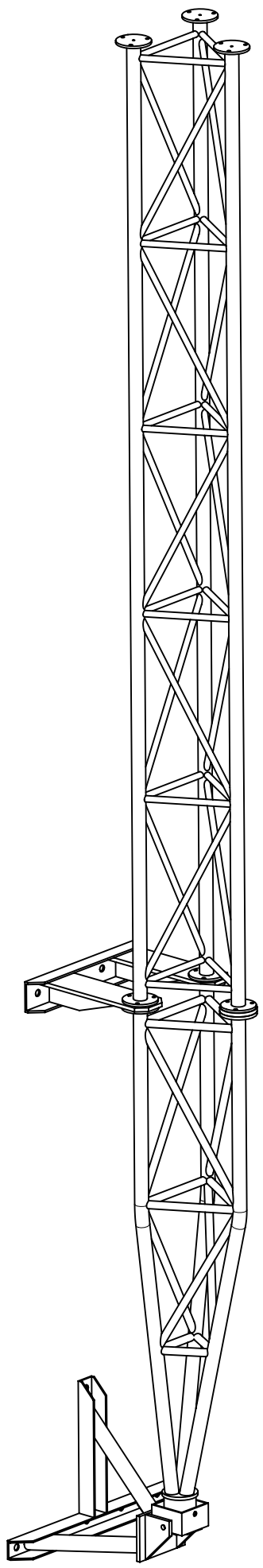

THIS DRAWNING CONTAINS CONFIDENTAL INFORMATION WHICH IS THE PROPERTY OF AluPro S.C. COMPANY. THIS DRAWNING MAY NOT BE REPRODUCED, TRANSFERRED OR USED, OR ITS CONTENTS DISCLOSED WHITOUT THE PRIOR WRITTEN PERMISSION OF AluPro S.C. COMPANY

MATERIAL: AW6063T6	QUANTITY:	DRAWN BY:	D.Wojciechowski
MACHINE:		DATE:	19-06-2017
DRAWING PREPARED FOR: AluPro		CHECKED BY:	
		3D FILE:	
TITLE: wall mounted mast M250-4 dist=300mm		SCALE: 15 : 100	SHEET: 1 of 1
		JOB NUMBER:	
FIRST ANGLE PROJECTION:	AluPro s.c.	DRAWING NO°: 2017.06.1902A	REV: A

TOLERANCES (UNLESS OTHERWISE SPECIFIED) ISO 2768-1:1989 "M" SERIES

LINEAR DIMENSIONS													
ABOVE	0,5	3	6	30	120	400	1000	2000	4000		10	50	120	400
TO	3	6	30	120	400	1000	2000	4000		LENGHT OF SHORTEN ARM ANGLE	10	50	120	400
TOLERANCE	±0,1	±0,1	±0,2	±0,3	±0,5	±0,8	±1,2	±2	ANGLES	TOLERANCE	±1°	±1°30'	±0°20'	±0°10'	±0°05'