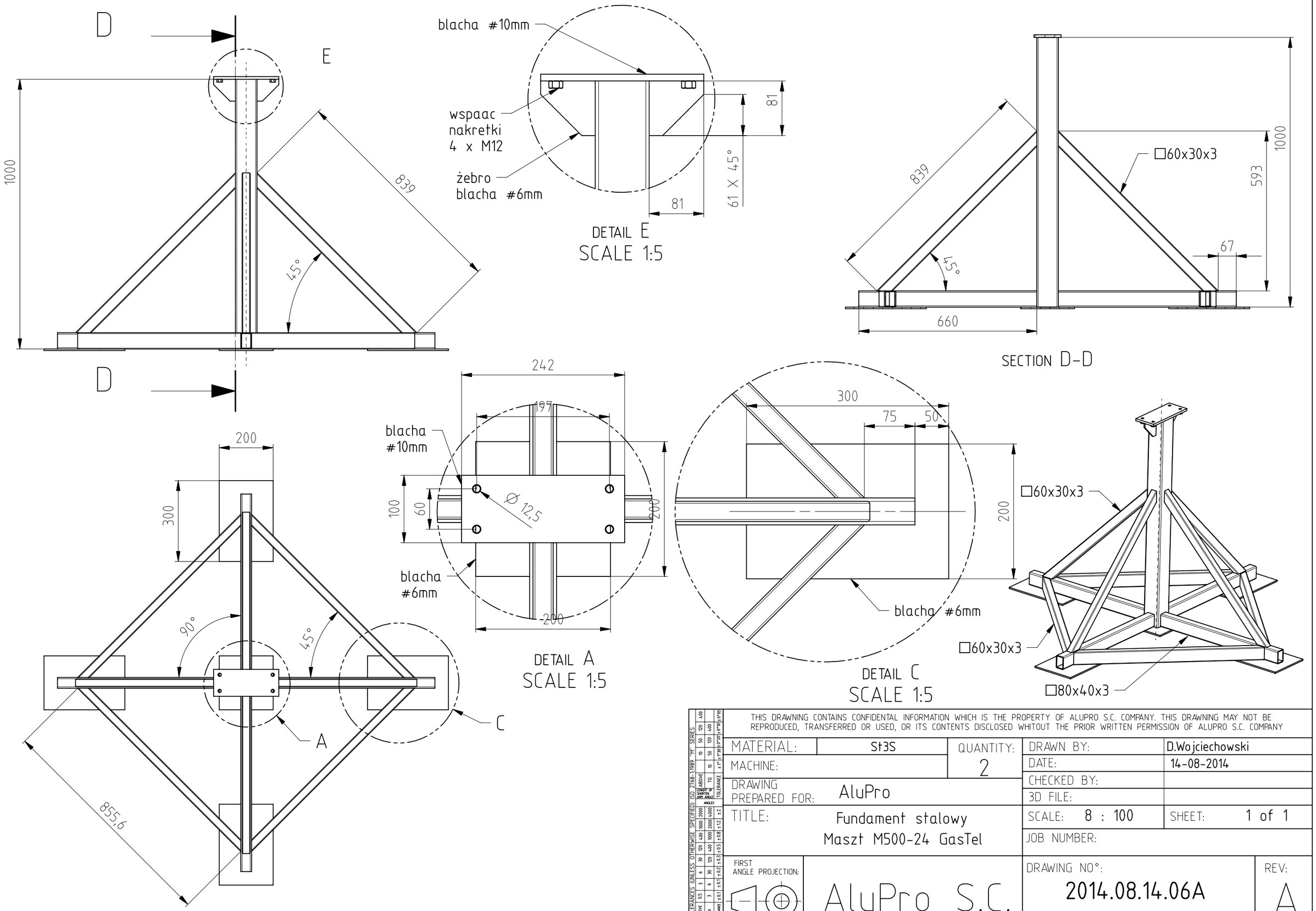

THIS DRAWNING CONTAINS CONFIDENTAL INFORMATION WHICH IS THE PROPERTY OF ALUPRO S.C. COMPANY. THIS DRAWNING MAY NOT BE REPRODUCED, TRANSFERRED OR USED, OR ITS CONTENTS DISCLOSED WHITOUT THE PRIOR WRITTEN PERMISSION OF ALUPRO S.C. COMPANY

MATERIAL: St3S	QUANTITY: 2	DRAWN BY:	D.Wojciechowski
MACHINE:		DATE:	14-08-2014
DRAWING PREPARED FOR: AluPro		CHECKED BY:	
		3D FILE:	
TITLE: Fundament stalowy Maszt M500-24 GasTel		SCALE: 8 : 100	SHEET: 1 of 1
		JOB NUMBER:	
FIRST ANGLE PROJECTION:	AluPro S.C.	DRAWING NO°: 2014.08.14.06A	REV: A

TOLERANCES (UNLESS OTHERWISE SPECIFIED) ISO 2768-1:1989 "M" SERIES

LINEAR DIMENSIONS																	
ABOVE	0.5	3	6	30	120	400	1000	2000	4000	ANGLES	LENGTH OF SHORTEN ARM ANGLE	ABOVE	10	50	120	400
TO	3	6	30	120	400	1000	2000	4000				TO	10	50	120	400
TOLERANCE	±0.1	±0.1	±0.2	±0.3	±0.5	±0.8	±1.2	±2				TOLERANCE	±1°	±1°30'	±0°20'	±0°10'	±0°05'